HITACHI

LIST NO. E836

ELECTRIC TOOL PARTS LIST

■ CHARGER

1989·10·30

Model BC-2

BC-2(E1)

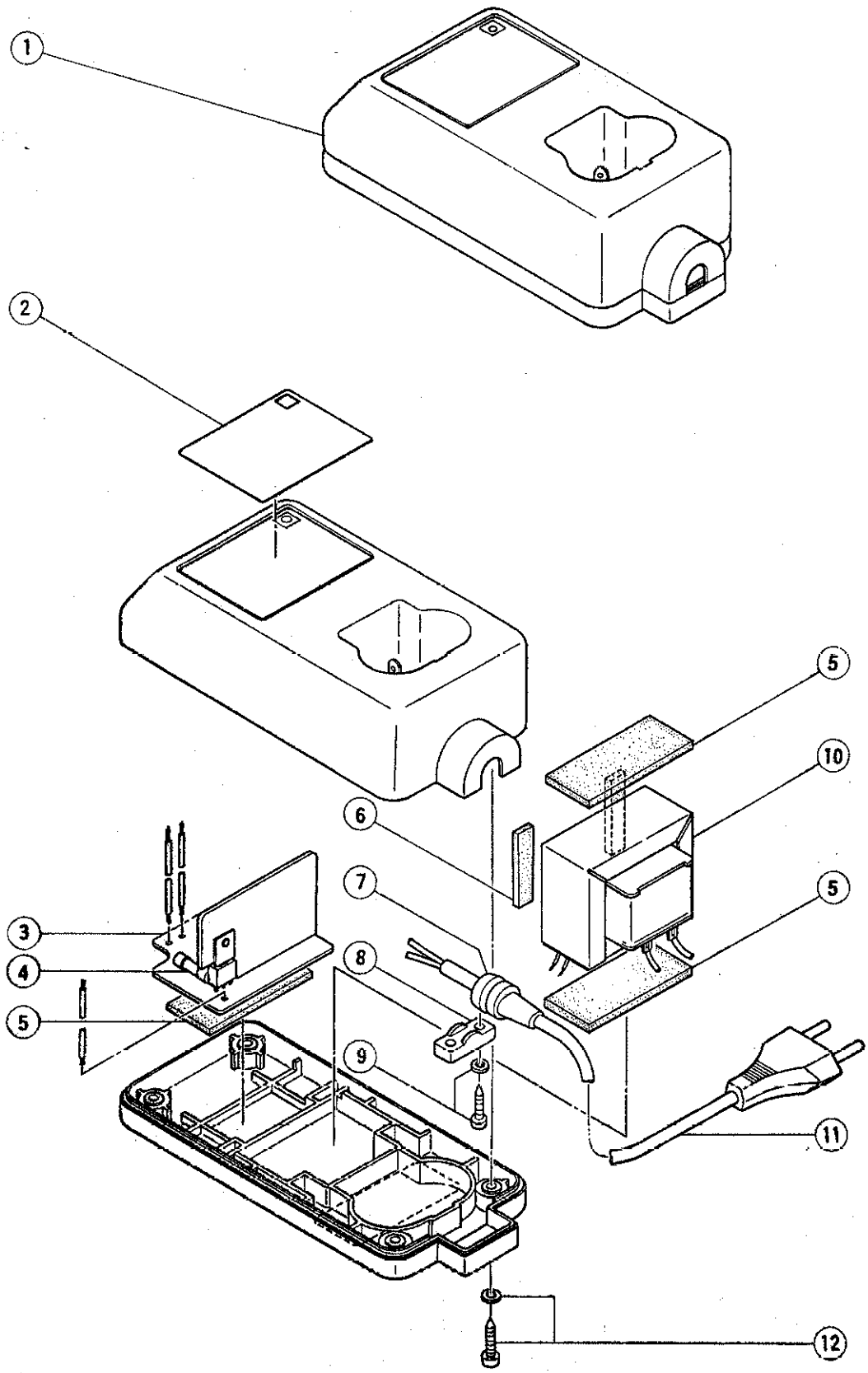

	ITEM NO.	CODE NO.	DESCRIPTION	NO. USED	REMARKS
*	1	980—630	CASE	1	
*	1	980—646Z	CASE	1	FOR USA,CAN
*	1	980—615Z	CASE	1	FOR FIN
	2		NAME PLATE	1	
*	3	980—625	PRINTED CIRCUIT BOARD ASS'Y	1	INCLUD.4
*	3	980—638Z	PRINTED CIRCUIT BOARD (A) ASS'Y	1	INCLUD.4 FOR EUROPE
*	3	980—639Z	PRINTED CIRCUIT BOARD ASS'Y	1	INCLUD.4 FOR USA,CAN
*	4	980—626	FUSE	1	
*	4	980—640Z	FUSE	1	FOR EUROPE
*	4	980—641Z	FUSE	1	FOR USA,CAN
	5	980—623	CUSHION	3	
*	6	982—520	SPACER	2	
*	6	982—520	SPACER	4	FOR FIN
*	7	991—167	CORD ARMOR	1	
*	7	991—168	CORD ARMOR (B) D7.0	1	FOR FIN
	8	937—631	CORD CLIP	1	
	9	930—446	TAPPING SCREW (W/WASHER) D4X16	2	
*	10	980—637Z	TRANSFORMER 110V—127V	1	
*	10	980—630Z	TRANSFORMER 220V	1	
*	10	980—633Z	TRANSFORMER 230V—240V	1	
*	10	980—610	TRANSFORMER 240V	1	FOR AUS
*	11	980—642Z	CORD	1	
*	11	980—644Z	CORD	1	FOR GBR
*	11	980—616Z	CORD	1	FOR FIN
*	11	980—645Z	CORD	1	FOR USA,CAN
*	11	980—611	CORD	1	FOR AUS
*	11	993—646	CORD	1	FOR TPE,SAU,CYP,SRI,ECU
*	11	980—643Z	CORD	1	FOR NZL,NGU
	12	980—612	TAPPING SCREW (W/WASHER) D4X25	4	

* : ALTERNATIVE PARTS